Holy
Sigma

Unit 19

Computer and Processor Architecture

Processor Architecture: -

Essentially, the term processor architecture involves the following: -

- the instruction set
  - instructions can be **complex** that require multiple clock cycles to complete them, or they can be **simple** that require just one clock cycle.
- the instruction format.
- the addressing modes
- the registers accessible by instructions

The Control Unit

It is the responsibility of the Control Unit to make sure that the machine instruction received during program execution are handled properly. There are essentially two ways of doing this:-

The control unit can be constructed as a logic circuit and the machine instructions can then be handled directly by the **HW (hard-wired solution)**

OR

The control unit will have a ROM that is preloaded with micro instructions that are used when 'decoding' individual machine code instructions. These microinstructions are also referred to as **firmware.**

However, the choice between the two largely depends on the type of processor.

The CISC Approach (INTEL x86):-
CISC processors are capable of handling complex instructions.

As a result, the hard wiring was extremely difficult and that is why micro instructions were used.

Due to smaller number of registers, this led to frequent memory accesses.

But due to lesser number of instructions, it leads to lesser memory requirements.

On the other side, the increase complexity of CISC instructions made them look like High Level Instructions (for e.g. MUL A,B) due to which writing compiler was very simple. i.e. Translation is simpler.

Focus is on HW rather than efficient code.

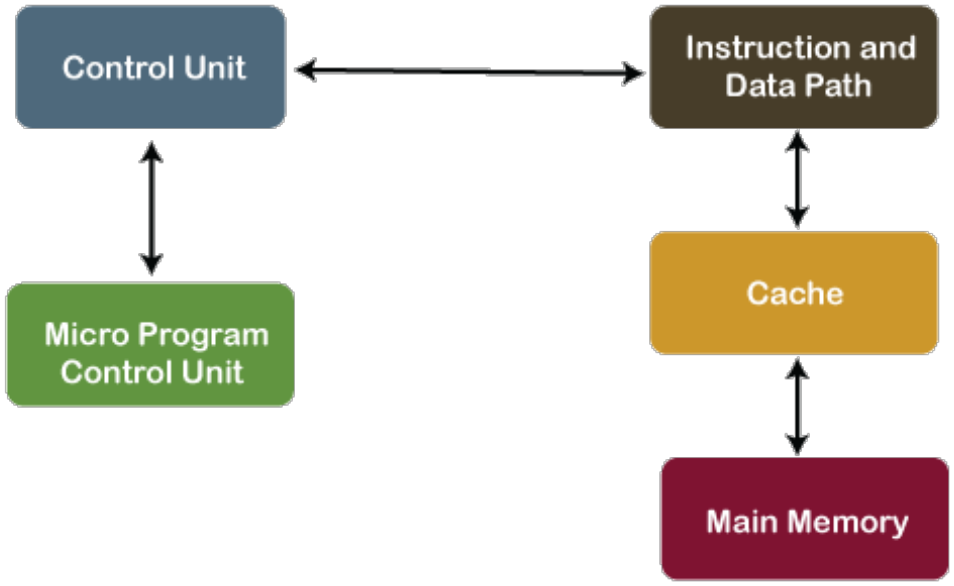

CISC Architecture

Suppose we need to add two different 8-bit numbers:
1. CISC approach: There would be a single instruction or command for this, such as ADD, that would perform the task.

A simple analogy to relate is when you are told to open the book and read the 3rd chapter's 2nd page. In this series of activities, you do multiple steps like finding the book from your bag than shuffling the page to chapter 3 and then going to the 2nd page of the chapter and then start reading. The series of a step if combined in a single instruction of reading page 44 (which is the 2nd page number of 3rd chapter), we get a CISC instruction.

The RISC Approach (ARM):-
As processor capability rose the instructions could become simpler or 'reduced'.

Smaller simpler instructions meant that they could now easily be stored in registers without having to access the memory frequently other than to **load** a program and finally **store** it.

One instruction will usually take ONE CLOCK cycle to complete.

Since there are now more instructions, therefore there is more memory requirement.

However, will more registers PIPELINING is easier.

Focus is on efficient code, rather than HARDWARE.

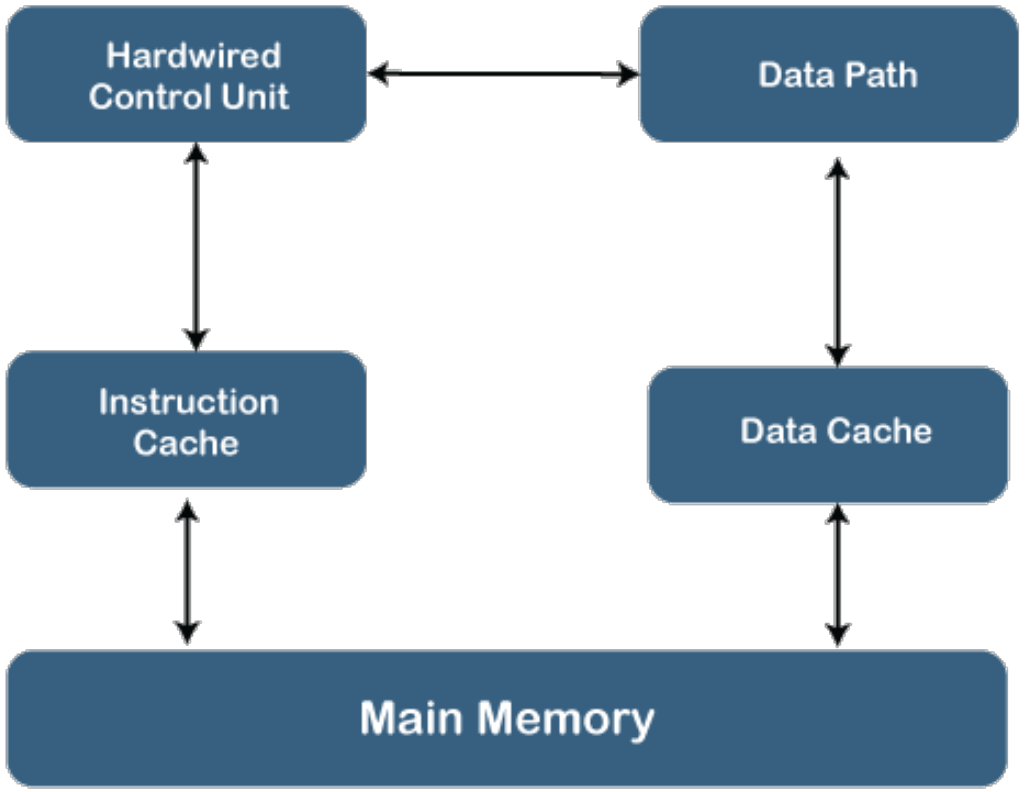

RISC Architecture

Suppose we need to add two different 8-bit numbers:

In this case, the programmer would write the very first load command to load data in the registers. Then it would use a suitable operator and store the obtained result in the location that is desired.

RISC	CISC
Fewer instructions	More instructions
Simpler instructions	More complex instructions
Small number of instruction formats	Many instruction formats
Single-cycle instructions whenever possible	Multi-cycle instructions
Fixed-length instructions	Variable-length instructions
Only load and store instructions to address memory	Many types of instructions to address memory
Fewer addressing modes	More addressing modes
Multiple register sets	Fewer registers
Hard-wired control unit	Microprogrammed control unit
Pipelining easier	Pipelining more difficult

Pipelining:-

The **underlying concept** behind Pipelining is the **Fetch Decode Execute Cycle** which has been discussed earlier. The process can be divided into the following parts:-

- Instruction Fetch (IF)
- Instruction Decode (ID)
- Operand Fetch (OF)
- Instruction Execute (IE)
- Result Write Back (WB)

For pipelining to be possible the processor must be constructed to allow for **five independent** units for each stage. The RISC architecture comes in handy with its many allowed registers.

Even Interrupts are handled differently. When an Interrupt occurs, all five stages will have instructions in them. To deal with this we can

- Erase the pipeline contents for the latest four instructions that have been entered. And the Interrupt Handling Routine can be applied for the remaining instruction (there will be only instruction remaining and it will also be the earliest one i.e. near completion therefore no need to erase it).
- Or processor can be constructed to allow for PC registers for each component so that all stages can be saved while the interrupt is being handled.

	Clock Cycles							
	1	**2**	**3**	**4**	**5**	**6**	**7**	**8**
IF	1.1	2.1	3.1	4.1	5.1	6.1	7.1	8.1
ID		1.2	2.2	3.2	4.2	5.2	6.2	7.2
OF			1.3	2.3	3.3	4.3	5.3	6.3
IE				1.4	2.4	3.4	4.4	5.4
WB					1.5	2.5	3.5	4.5
RESULT						1	2	3

At 5th clock cycle the first instruction will be completed and will leave the pipeline in the 6th cycle (i.e. produce a result). After the 6th clock cycle each clock cycle will be producing results (i.e. completing instructions).

Time Interval

stage	1	2	3	4	5	6	7	8	9
Fetch instruction	A	B	C						
Decode instruction		A	B	C					
Execute instruction			A	B	C				
Access operand in memory				A	B	C			
Write result to register					A	B	C		

With pipelining no of cycles = 7
Without pipelining no of cycles = 3 * 5 = 15
No of cycles saved = 8

Parallel Processor Systems (Flynn's Taxonomy)

The program (Instruction and Data) that is ready for execution resides in the memory.

A computer can have multiple processors running in parallel.

To understand the difference among these architectures, you need to understand the following terms:-

IS:- Instruction Stream

The Instruction part of the program will be made available to the control unit where it is decoded. After the decoded it is sent to the processor unit for execution. The instruction is being transported to between the MM, CU (Control Unit), PU (Processor Unit) through a unidirectional channel which is known as the Instruction Stream.

DS:- Data Stream

Once the instruction is brought to the PU for execution it will be require data necessary for execution This data will be sent from the MM through a bidirectional data stream to PU where it will be executed. The result produced because of execution will be written back to MM through the same DS.

MM:- Memory Module

One memory unit that holds instructions and data. It can be a CACHE or a range of memory locations.

SM:- Shared Memory

Multiple Memory modules care collectively known as a shared memory.

**The Processing Unit (PU) is also sometimes known as Processing Element (PE). Regardless of the name, all are Arithmetic Logic Units.*

SISD (Single Instruction Single Data Stream)

There is only single instruction stream sending instructions to CU and then PU. And there only a single Data Stream to access data for execution and storing results.

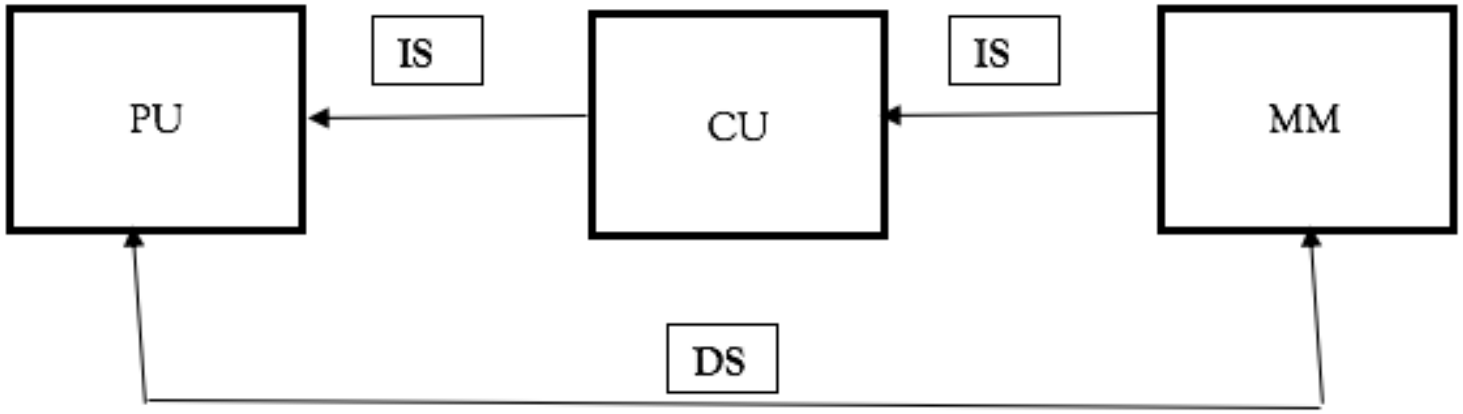

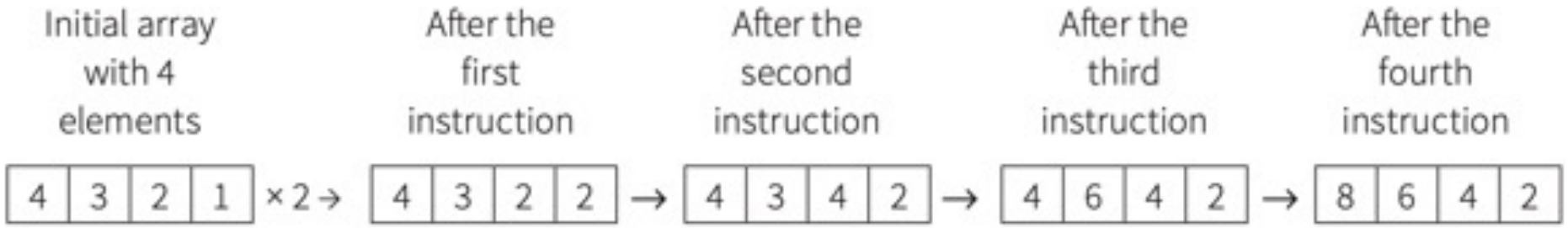

SIMD (Single Instruction Multiple Data Stream)
Single Instruction stream (therefore only a single instruction) being sent to CU for decoding and the same instruction is sent to multiple PU for executions. Each PU is executing different parts of the same instruction in parallel using different DATA STREAMS connected to different MM in one shared memory. Also known as ARRAY PROCESSING.

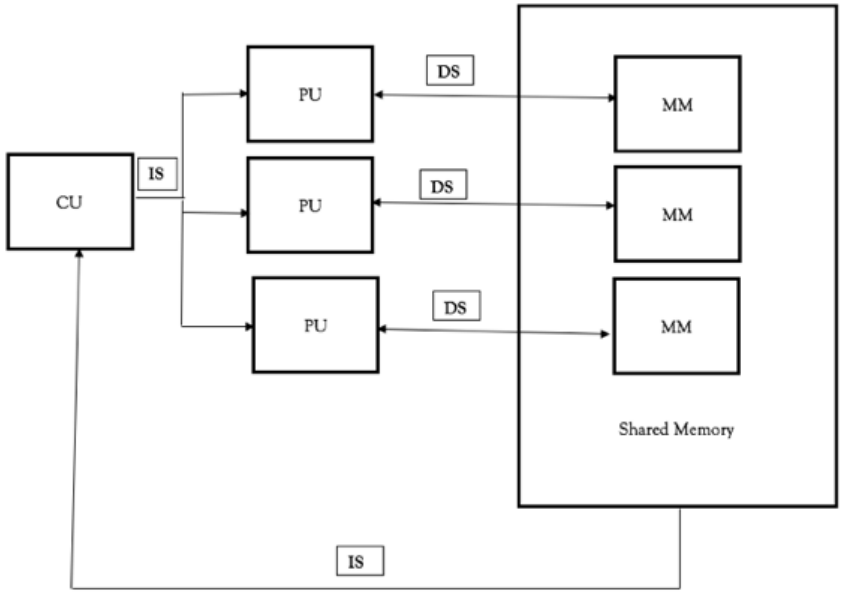

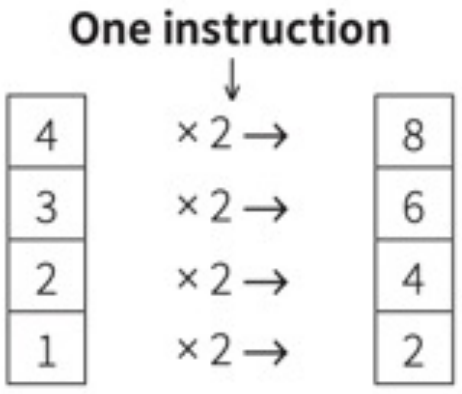

MISD (Multiple Instructions Single Data Stream)
Multiple Instructions streams are coming to multiple CU for decoding and then onwards to multiple PU for execution. However, all of these PU are using a single DS. **THIS MODEL HAS NEVER BEEN REALISTICALLY IMPLEMENTED.** *One example where the approach could be implemented would be in a fault-tolerant system. The same data stream could be fed into two or more processors. The output would only be accepted if the same output was produced by all the processors.*

MIMD (Multiple Instructions and Multiple Data Streams)

Multiple IS used to send multiple instructions to Multiple CU for decoding and then Multiple PU for executions which are connected to multiple MM in a SM for using bidirectional Data Steams.

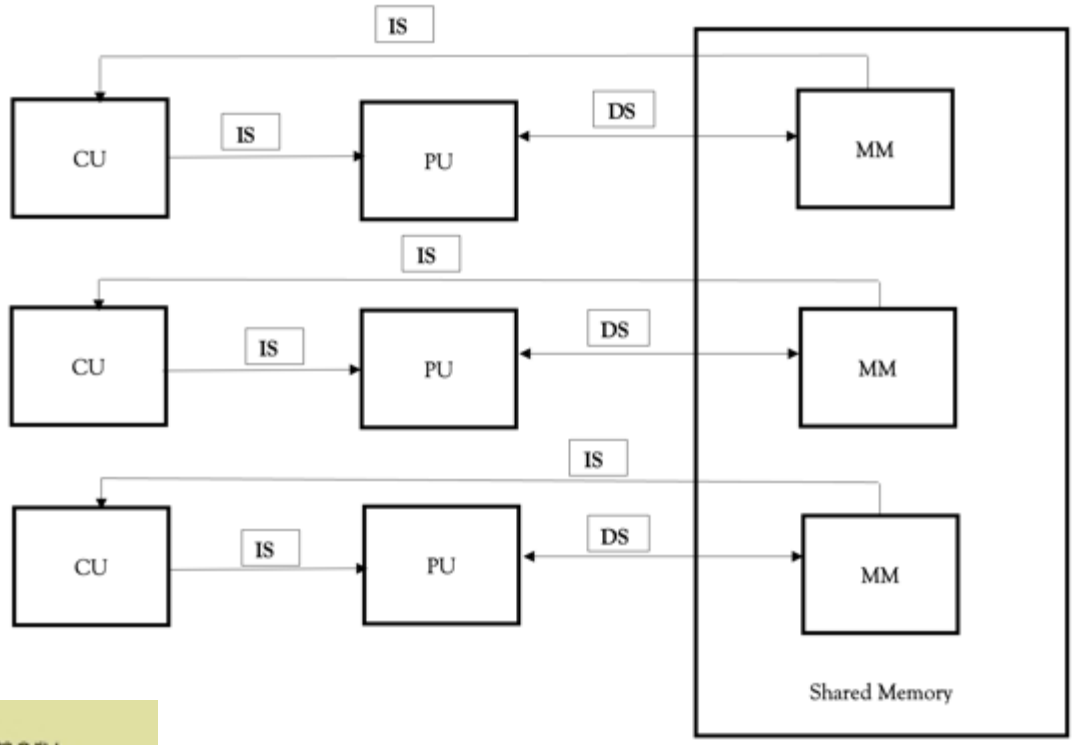

A LOOSELY COUPLED MIMD (**multiple PU using their own MM)** is in a way MULTIPLE SISD (MSISD) using a shared memory.

Which is not the case if it is TIGHTLY COUPLED (multiple PU using the same MM).

SISD: Single Instruction Stream Single Data stream; a single processor accessing one memory

SIMD: Single Instruction Stream Multiple Data stream; processing of parallel data input requiring one control unit instructing multiple processing units

MISD: Multiple Instruction Stream Single Data stream; does not exist in a single architecture

MIMD: Multiple Instruction Stream Multiple Data stream; multiple processors asynchronously processing parallel data input

Parallel Computer Systems

An example of parallel computer system is known as “massively parallel systems” that are used for highly complex calculations. They were once known as “super computers”.

As opposed to conventional computers, that supported buses between different processors, these systems have multiple computers operating in parallel connected through a network infrastructure so that programs running on different computers can communicate with each other.

Another type of multicomputer system is known as “cluster computing” which supports a very large number computers working together in a network.

Virtual Machines

A virtual machine is software not hardware. The most usual type of virtual machine is the system virtual machine which is software that emulates the hardware of a real computer system.

System virtual machine: the emulation of computer system hardware using software

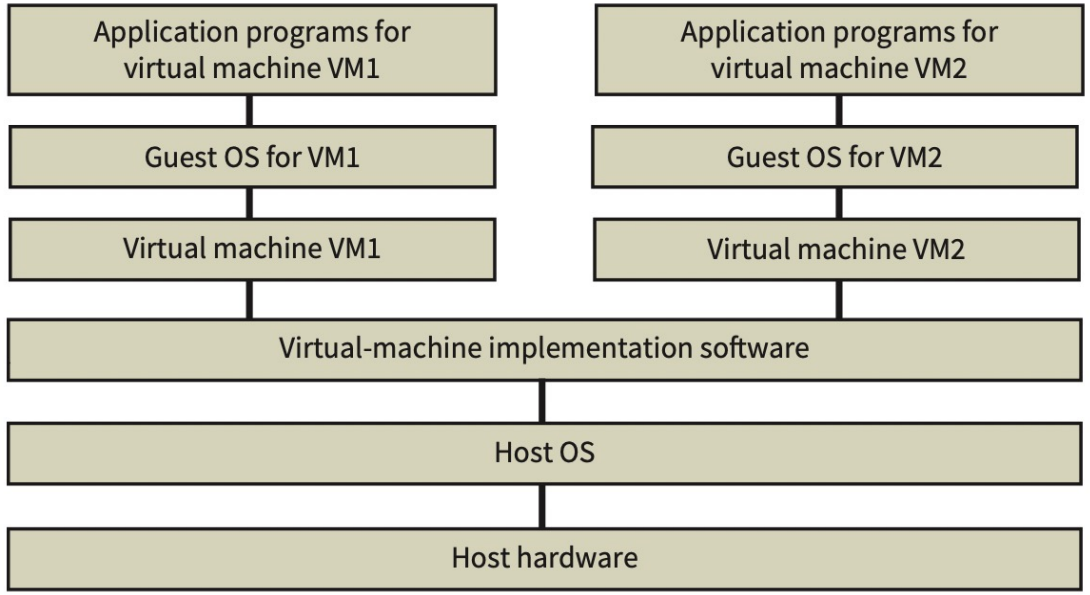

When a virtual machine is not being used an application program requires support from an operating system for the program to run on the hardware. The principle of a virtual machine is that a process interacts directly with a software interface provided by an operating system.

1. The application programs are installed with the assistance of a guest OS. This guest OS will support the running application by interacting with the virtual machine as though it were the hardware that the guest OS would normally run on.
2. The virtual machine implementation software can be considered to be a utility program which, when running, is supported by the particular host OS which is specific to the host hardware.
3. There can be application programs running at the same time directly on the host hardware under the control of the host OS.

The main advantage of the virtual machine approach is that more than one different operating system can be made available on one computer system.

This is particularly valuable if an organisation has legacy systems and wishes to continue to **use the old software but does not wish to keep the old hardware.**

Alternatively, the same operating system can be made available many times by companies with large mainframe computers that offer server consolidation facilities. Different companies can be offered their own virtual machine running as a server.

One drawback to using a virtual machine is the time and effort required for implementation. Another drawback is the fact that the implementation will not offer the same level of performance that would be obtained on a normal system.

The Java virtual machine (as discussed before) is an example of a **PROCESS VIRTUAL MACHINE,** based on a different underlying concept. The process virtual machine provides a platform-independent programming environment that allows a program to execute in the same way on any platform. This is specific software that only supports running a Java program.

A system virtual machine supports any application.

A Virtual Machine Undertakes Many Tasks:-

- Create / delete virtual machine
- Existing hardware made available to guest OS
- hardware emulation Ensures each virtual machine is protected from actions of another virtual machine

Difference b/w Guest and Host OS:-

Guest operating system:

- An operating system running in a virtual machine // Controls virtual hardware //
- OS is being emulated

Host operating system:

- The operating system that is controlling the physical hardware // the operating system for the physical machine// the OS running the VM software
- Guest OS is running under the Host OS software

What are the Possible Uses of Virtual Machines:-

- Trial/use alternative replacement operating system(s) ...Test to identify possible problems
- Much easier to create VM with a new OS than create new computer system
- Trial/use alternative replacement web server software ...Test to identify possible problems
- Easier to try alternative new software and new OS combinations
- To provide some additional service(s) and trial/test its use
- provide a safe environment during testing (which does not disrupt the web server service)

Drawbacks of Using Virtual Machine:-

- Virtual machine may not be able to emulate some hardware. So that hardware cannot be tested using a virtual machine By relevant example, e.g. developing hardware drivers
- Using virtual machine means execution of extra code // processing time increased so cannot accurately test speed of real performance.
- A virtual machine might not be as efficient. By relevant example, e.g. might not be able to access sufficient memory